ACT® Math Practice Test 1

Mathematics Test · 50 Minutes — 45 Questions

DIRECTIONS: Solve each problem, choose the correct answer, and then circle or fill in the corresponding letter on your answer sheet.

Do not linger over problems that take too much time. Solve as many as you can; then return to the others in the time you have left for this test.

You are permitted to use a calculator on this test. You may use your calculator for any problems you choose, but some of the problems may best be done without using a calculator.

Note: Unless otherwise stated, all of the following should be assumed.

1. Illustrative figures are NOT necessarily drawn to scale.
2. Geometric figures lie in a plane.
3. The word *line* indicates a straight line.
4. The word *average* indicates arithmetic mean.

Answer Sheet

1	A	B	C	D	16	F	G	H	J	31	A	B	C	D
2	F	G	H	J	17	A	B	C	D	32	F	G	H	J
3	A	B	C	D	18	F	G	H	J	33	A	B	C	D
4	F	G	H	J	19	A	B	C	D	34	F	G	H	J
5	A	B	C	D	20	F	G	H	J	35	A	B	C	D
6	F	G	H	J	21	A	B	C	D	36	F	G	H	J
7	A	B	C	D	22	F	G	H	J	37	A	B	C	D
8	F	G	H	J	23	A	B	C	D	38	F	G	H	J
9	A	B	C	D	24	F	G	H	J	39	A	B	C	D
10	F	G	H	J	25	A	B	C	D	40	F	G	H	J
11	A	B	C	D	26	F	G	H	J	41	A	B	C	D
12	F	G	H	J	27	A	B	C	D	42	F	G	H	J
13	A	B	C	D	28	F	G	H	J	43	A	B	C	D
14	F	G	H	J	29	A	B	C	D	44	F	G	H	J
15	A	B	C	D	30	F	G	H	J	45	A	B	C	D

All questions are original practice items written for Boost Your Test Score and modeled on the content and difficulty of released ACT Mathematics tests. ACT® is a registered trademark of ACT Education Corp., which is not affiliated with and does not endorse this material.

1. A tutor earned $35 on each of 2 days and $80 on each of 3 days. What was the tutor's average daily earnings for these 5 days?

A. $57.50
B. $60.00
C. $62.00
D. $64.00

2. In the figure below, C is on $\overline{BD}$, $\angle BAC$ measures $42°$, and $\angle ABC$ measures $87°$. What is the measure of $\angle ACD$?

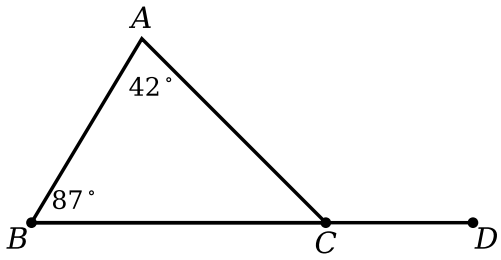

F. $51°$
G. $93°$
H. $129°$
J. $138°$

3. For the data set 12, 15, 15, 18, 21, 27, which of the following statistics has the greatest value?

A. Mean
B. Median
C. Mode
D. Range

DO YOUR FIGURING HERE.

GO ON TO THE NEXT PAGE.

4. Which of the following functions satisfies $f(3) = 11$?

F. $f(x) = x^2 + 2$

G. $f(x) = 2^x + 4$

H. $f(x) = 5x - 3$

J. $f(x) = x^3 - 17$

5. Printer cartridges cost $18 each. A 6% sales tax is charged on the cartridges, and a flat $7 shipping fee (not taxed) is added to every order. Which equation gives the total cost y, in dollars, of an order of x cartridges?

A. $y = 18x + 7$

B. $y = 19.08x + 7$

C. $y = 1.06(18x + 7)$

D. $y = 25.08x$

6. A drone flies 2.4 kilometers from a launch pad to a field at an average speed of 18 kilometers per hour and returns along the same path at an average speed of 24 kilometers per hour. How many minutes does the round trip take?

F. 12

G. 14

H. 16.8

J. 28

7. On the first day of a reading challenge, Ana read 9 pages. On each day after that, she read 6 pages. At the end of which day did the total number of pages she had read first exceed 250 ?

A. 40th

B. 41st

C. 42nd

D. 43rd

DO YOUR FIGURING HERE.

GO ON TO THE NEXT PAGE.

8. Which of the following is equivalent to $\dfrac{(2x^3y^{-2})^3}{4x^{-1}y^2}$ for all nonzero x and y ?

F. $\dfrac{2x^{10}}{y^8}$

G. $\dfrac{2x^8}{y^4}$

H. $\dfrac{x^{10}}{2y^8}$

J. $\dfrac{6x^{10}}{y^8}$

9. While riding along a highway, Jaden notices mile marker 214 at 1:10 p.m. and mile marker 187 at 1:28 p.m. What was the average speed, in miles per hour, of the car between these two markers?

A. 54

B. 75

C. 81

D. 90

10. In the standard (x, y) coordinate plane, $M(4, -1)$ is the midpoint of $\overline{PQ}$, and P has coordinates $(-3, 6)$. What are the coordinates of Q ?

F. $(0.5,\ 2.5)$

G. $(7,\ -7)$

H. $(11,\ -8)$

J. $(-10,\ 13)$

DO YOUR FIGURING HERE.

GO ON TO THE NEXT PAGE.

11. A student council is planning a dance. Expenses will be $180 for music, $435 for food, and $95 for decorations. The council expects 400 students to attend and wants to raise at least $500 after paying all expenses. If the ticket price must be a multiple of $0.25, what is the lowest ticket price that meets the goal?

A. $3.00
B. $3.03
C. $3.25
D. $3.50

12. At a store, 4 notebooks and 3 packs of pens cost $19.25, and 6 notebooks and 2 packs of pens cost $21.50. What is the total cost of 1 notebook and 1 pack of pens?

F. $5.25
G. $5.55
H. $5.75
J. $6.15

13. Given $f(x) = 2x - 5$ and $g(x) = x^2 - 3x$, what is the value of $g\big(f(1)\big)$?

A. -9
B. 6
C. 12
D. 18

DO YOUR FIGURING HERE.

GO ON TO THE NEXT PAGE.

14. As shown below, a square is inscribed in a circle with radius 6 centimeters. What is the area, in square centimeters, of the shaded region inside the circle but outside the square?

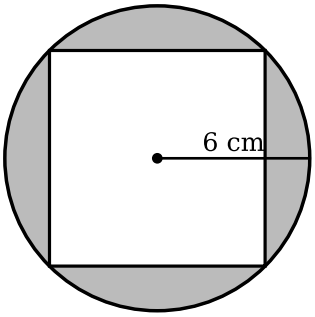

F. $36\pi - 72$

G. $36\pi - 144$

H. $144 - 36\pi$

J. $72\pi - 72$

15. Given that $i = \sqrt{-1}$, what is the product $(3 - 2i)(1 + 4i)$?

A. $-5 + 10i$

B. $3 - 8i$

C. $11 + 10i$

D. $11 + 14i$

16. Which of the following is equivalent to $(y + 4)^3$?

F. $y^3 + 64$

G. $y^3 + 12y + 64$

H. $y^3 + 4y^2 + 16y + 64$

J. $y^3 + 12y^2 + 48y + 64$

DO YOUR FIGURING HERE.

GO ON TO THE NEXT PAGE.

17. The mean of 6 test scores is 82. When the lowest score is dropped, the mean of the remaining 5 scores is 86. What was the lowest score?

A. 58
B. 62
C. 66
D. 78

18. Which of the following is the solution set of $|2x - 3| < 7$?

F. $-2 < x < 5$
G. $-5 < x < 2$
H. $x < -2$ or $x > 5$
J. $-2 < x < 2$

19. In a survey of 60 students, 34 play a musical instrument, 25 play a school sport, and 9 do neither. One of the students who plays a school sport will be selected at random. What is the probability that the selected student also plays a musical instrument?

A. $\frac{8}{60}$
B. $\frac{8}{34}$
C. $\frac{8}{25}$
D. $\frac{17}{25}$

20. A tank holds 30 liters of a mixture that is 25% acid and 75% water. How many liters of pure acid must be added so that the new mixture is 40% acid?

F. 4.5
G. 6
H. 7.5
J. 12

DO YOUR FIGURING HERE.

GO ON TO THE NEXT PAGE.

21. The graph of $y = g(x)$ is obtained by shifting the graph of $y = f(x)$ 3 units to the left, then stretching it vertically by a factor of 2, and then reflecting it over the x-axis. The point $(4, -5)$ is on the graph of f. Which point must be on the graph of g ?

A. $(1, 10)$
B. $(1, -10)$
C. $(7, 10)$
D. $(7, -10)$

22. $\triangle ABC$ is similar to $\triangle DEF$. The side lengths of $\triangle ABC$ are 9, 12, and 15 inches, and the area of $\triangle DEF$ is 4 times the area of $\triangle ABC$. What is the perimeter, in inches, of $\triangle DEF$?

F. 36
G. 72
H. 108
J. 144

23. A student's report card is shown below. Each grade is worth A = 4, B = 3, C = 2 points, and the grade point average (GPA) is weighted by credits: the sum of (points × credits) divided by the total credits. To the nearest hundredth, what is the student's GPA?

Course	Credits	Grade
Chemistry	4	A
History	3	B
English	3	B
Spanish	2	C
Health	1	A

A. 3.20
B. 3.23
C. 3.25
D. 3.40

DO YOUR FIGURING HERE.

GO ON TO THE NEXT PAGE.

24. If $\log_x 54 - \log_x 2 = 3$, what is the value of x ?

F. 3

G. 9

H. 18

J. 27

25. What is the digit in the ones place of 7^{2026} ?

A. 1

B. 3

C. 7

D. 9

26. If $-3 \leq x \leq 2$ and $-1 \leq y \leq 6$, what is the maximum possible value of $|x - y|$?

F. 3

G. 5

H. 8

J. 9

27. An exponential function $f(n) = a \cdot b^n$, where $b > 0$, satisfies $f(1) = 6$ and $f(3) = 54$. What is the value of $f(5)$?

A. 162

B. 216

C. 486

D. 1,458

DO YOUR FIGURING HERE.

GO ON TO THE NEXT PAGE.

28. In the standard (x, y) coordinate plane, what are the center and radius of the circle $x^2 + y^2 - 6x + 10y + 9 = 0$?

F. Center $(3, -5)$, radius 5

G. Center $(-3, 5)$, radius 5

H. Center $(3, -5)$, radius 25

J. Center $(-3, 5)$, radius $\sqrt{43}$

29. For what positive value of k does the equation $4x^2 - kx + 9 = 0$ have exactly one real solution?

A. 6

B. 12

C. 18

D. 36

30. A weather forecast gives a 40% chance of rain tomorrow. If it rains, there is a 75% chance the outdoor concert will be canceled. If it does not rain, there is a 15% chance the concert will be canceled for other reasons. Given that the concert is canceled, what is the probability, to the nearest percent, that it rained?

F. 30%

G. 39%

H. 75%

J. 77%

DO YOUR FIGURING HERE.

GO ON TO THE NEXT PAGE.

31. In $\triangle ABC$ below, $\angle C$ is a right angle, and D is on $\overline{BC}$. The measure of $\angle ADC$ is $45°$, the measure of $\angle ABC$ is $30°$, and $BD = 40$ feet. What is the length, in feet, of $\overline{AC}$?

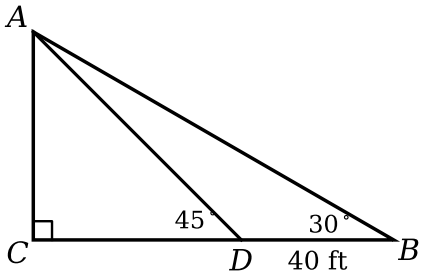

A. $20\sqrt{3}$
B. $20(\sqrt{3}+1)$
C. $40(\sqrt{3}-1)$
D. $40\sqrt{3}$

32. What is the least positive integer that has a remainder of 2 when divided by 3, a remainder of 3 when divided by 4, and a remainder of 4 when divided by 5 ?

F. 29
G. 47
H. 59
J. 119

33. A right pyramid has a square base with side length 18 feet and a height of 12 feet. What is the total surface area, in square feet, of the pyramid (including the base)?

A. 540
B. 756
C. 864
D. 1,296

DO YOUR FIGURING HERE.

GO ON TO THE NEXT PAGE.

34. Which of the following values of x is NOT in the domain of $f(x) = \dfrac{1}{1 - \tan x}$?

F. 30°

G. 60°

H. 135°

J. 225°

35. For how many integers x is the value of $(x - 2)(x - 3)$ a positive prime number?

A. 0

B. 1

C. 2

D. 3

36. From the entrance of a park, Ray walks 300 feet due east and then 500 feet in a straight line 30° north of east, as shown below. Which expression gives his straight-line distance, in feet, from the entrance?

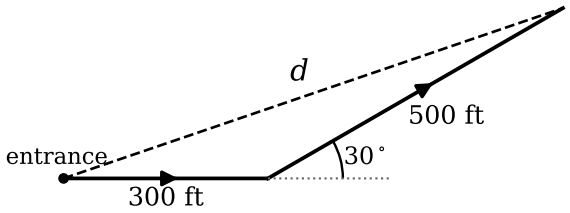

F. $\sqrt{300^2 + 500^2}$

G. $300 + 500 \cos 30^\circ$

H. $\sqrt{300^2 + 500^2 - 2(300)(500) \cos 30^\circ}$

J. $\sqrt{300^2 + 500^2 - 2(300)(500) \cos 150^\circ}$

DO YOUR FIGURING HERE.

GO ON TO THE NEXT PAGE.

37. Eight club members, including Lena and Omar, will be seated at random around a circular table with 8 seats. What is the probability that Lena and Omar sit next to each other?

A. $\frac{1}{28}$

B. $\frac{1}{7}$

C. $\frac{1}{4}$

D. $\frac{2}{7}$

38. The frequency table below shows the scores of 32 students on a 10-point quiz. To the nearest tenth, how much greater is the median score than the mean score?

Score	5	6	7	8	9	10
Frequency	2	4	7	9	6	4

F. 0.0

G. 0.2

H. 0.5

J. 1.0

39. The graph of $f(x) = \dfrac{2x^2 - 8}{x^2 - x - 6}$ in the standard (x, y) coordinate plane has which vertical asymptote(s)?

A. $x = -2$ only

B. $x = 3$ only

C. $x = -2$ and $x = 3$

D. $x = 2$ only

DO YOUR FIGURING HERE.

GO ON TO THE NEXT PAGE.

40. For certain positive integers a and b, the greatest common divisor of a and b is 1, and $15a = 6b$. What is the value of $a + b$?

F. 7
G. 11
H. 21
J. 30

41. A cylindrical tank with radius 3 feet and height 10 feet is filled with water to a depth of 4 feet. A solid metal ball with radius 3 feet is lowered into the tank and is completely underwater. What is the new depth of the water, in feet? ($V_{\text{sphere}} = \frac{4}{3}\pi r^3$)

A. 6
B. 7
C. 8
D. 9

42. A function of the form $y = a\cos(bx) + c$, where $a > 0$ and $b > 0$, has a maximum value of 5, a minimum value of -1, and a period of π. Which of the following is the function?

F. $y = 3\cos(2x) + 2$
G. $y = 3\cos\left(\frac{1}{2}x\right) + 2$
H. $y = 6\cos(2x) - 1$
J. $y = 2\cos(2x) + 3$

43. A committee of 4 students will be chosen from 7 juniors and 5 seniors. How many different committees include at least 2 seniors?

A. 210
B. 285
C. 350
D. 495

DO YOUR FIGURING HERE.

GO ON TO THE NEXT PAGE.

44. For all $x \neq \pm y$, $\dfrac{x}{x+y} + \dfrac{y}{x-y} = ?$

F. $\dfrac{x^2+y^2}{x^2-y^2}$

G. $\dfrac{x+y}{x^2-y^2}$

H. 1

J. $\dfrac{x^2-y^2}{x^2+y^2}$

45. In the standard (x, y) coordinate plane, what is the area, in square units, of the triangle with vertices $A(1, 2)$, $B(7, 4)$, and $C(5, 10)$?

A. 18

B. 20

C. 24

D. 40

DO YOUR FIGURING HERE.

END OF TEST

STOP! Check your work on this test only.